4KW Robotic Laser Cutting head - User Manual

- We reserve the right to change the design in order to improve the quality or expand the application or comply to manufacturing workmanship.
- We will not bear any responsibility for losses and accidents caused by wrong operation or improper handling of our products.
- Dismantling of product will lose all warranty claims excluding the normal replacement of worn parts and components required for maintenance or commissioning operations.
- Unauthorized modification of products or use of non-original spare parts will directly lead to the invalidation of warranty and liability exemption.
- It is recommended to only use the spare parts provided by us or submit them to us or the designated professional team nionat

RAYT L

1 Summary 1
1.1 Product Feature 1
2 Mechanical Installation 3
2.1 Mounting Hole 3
2.2 Connection of Cooling Water and Assist Gas 4
2.3 Fiber Interface 6
2.4 Beam Adjustment 7
2.5 Adjustment of Focus Point 8
3 Maintenance 9
3.1 Cleaning Lens 9
3.2 Removal and Installation of Lens 9
3.3 Replace Nozzle Connector 13

This manual introduces the basic installation, ex-works setting, operation and maintenance of GF101 series product. GF101 series has a wide range of mechanical and optical configuration and this manual only gives an introduction to the main modules.

GF101 is one medium/high power 3D laser cutting head which was launched by Raytools AG in 2016. It equipped with built-in motorized drive module to drive Z axis motion automatically in 20mm range for height tracking. Optimized focus system, annular gas path and lightweight design can be fully applicable to metal sheet cutting and else 3D cutting. Optimized optical and water cooling design can enable cutting head to work in stable status continuously.

- Optimized optical configuration and smooth, efficient airflow design to meet different applications of thin plate cutting and other customized 3D laser cutting environment.
- Lightweight design to decline the payload of robot.
- Adjustment range of manual focus +7 to -9mm with accuracy 0.25mm.
- Additional top cover glass above collimation lens to prevent dust dropping onto collimation lens directly.
- Drawer type cover glass holder to facilitate the replacement of cover glass.
- Modular design and skinny nozzle to decline interference from workpiece.
- Adjustment of fiber insertion.
- Various fiber interfaces available to match different lasers.
- Reliable seal design.

As shown in figure 1, the laser cutting head consists of 7 modules as below.

- FIA assembly: to accommodate fiber, compatible to QBH, QD and others.
- CWM assembly: to prevent dust from dropping onto collimation lens directly to cause damage.
- FRA assembly: to collimate laser beam from laser source.
- F-M assembly: built-in motorized module to drive Z axis motion for height tracking.
- F-FM assembly: to focus the collimated laser beam and achiev

GF101 laser cutting head is to be mounted on flange of robot by the mounting plate which is located on the F-M assembly. The location of mounting hole and size is shown as Figure 2 & 3.

: the laser cutting head shall be conductive to robot with good earthing.

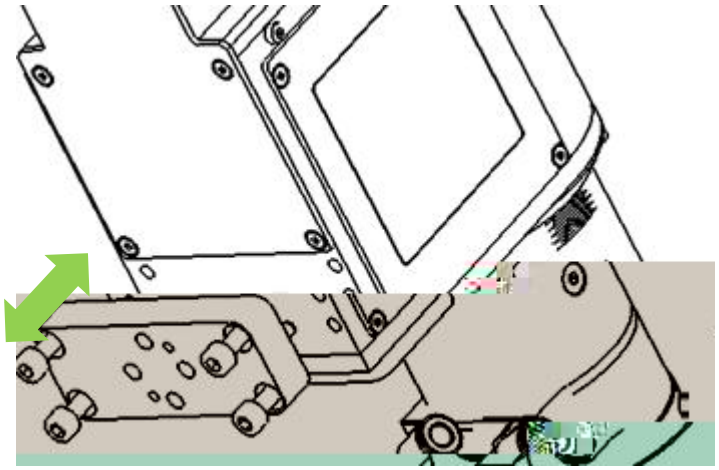

Figure 2 Mounting Hole

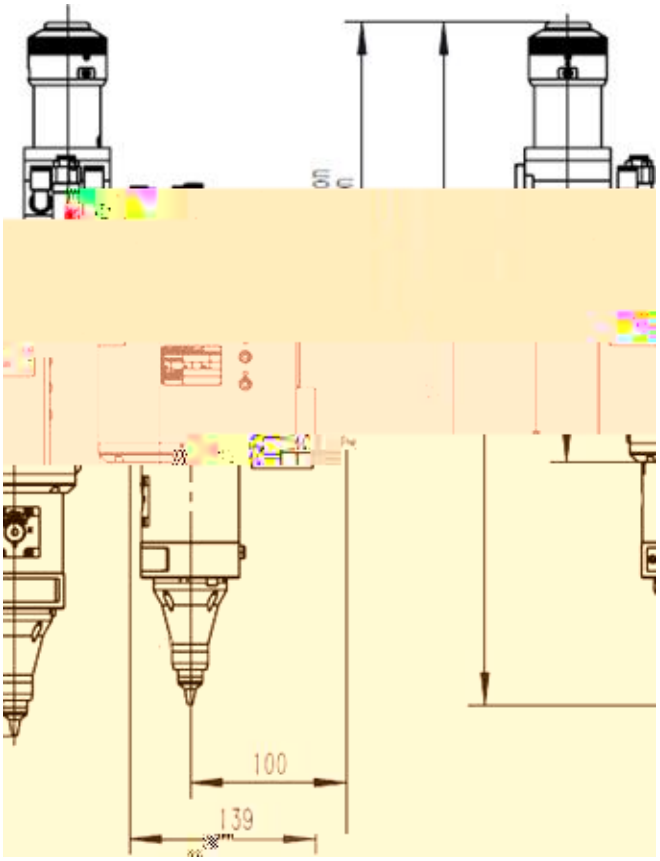

Figure 3 Size of cutting head

Cutting quality in a great extent depends on whether the lens is in the middle. If the lens is not in the middle, the laser beam may contact with nozzle or inner wall to produce high temperature deformation. Lens centering

Removal and installation of focus lenses refer to the following steps:

Remove the laser head and move to a dust free room. Clean all dusts on the laser head surface;

Unscrew the locking screw as figure 12;